Masonry Details

Purpose: To highlight several important details for masonry construction in coastal areas.

Key Issues

- Continuous, properly connected load paths are essential because of the higher vertical and lateral loads on coastal structures.
- Building materials must be durable enough to withstand the coastal environment.
- Masonry reinforcement requirements are more stringent in coastal areas.

Load Paths

A properly connected load path from roof to foundation is crucial in coastal areas (see Fact Sheets Nos. 10 and 17). The following details show important connections for a typical masonry home.

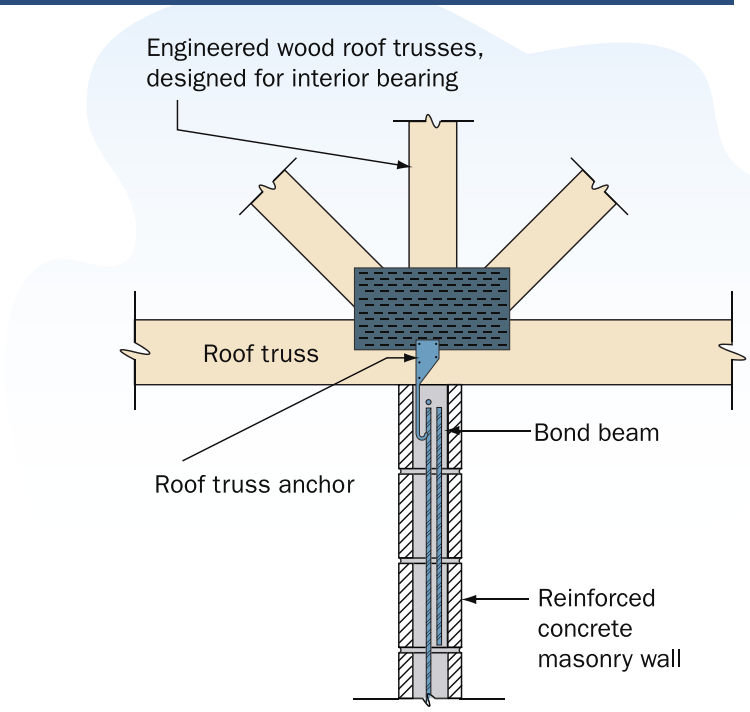

Roof framing to interior masonry wall

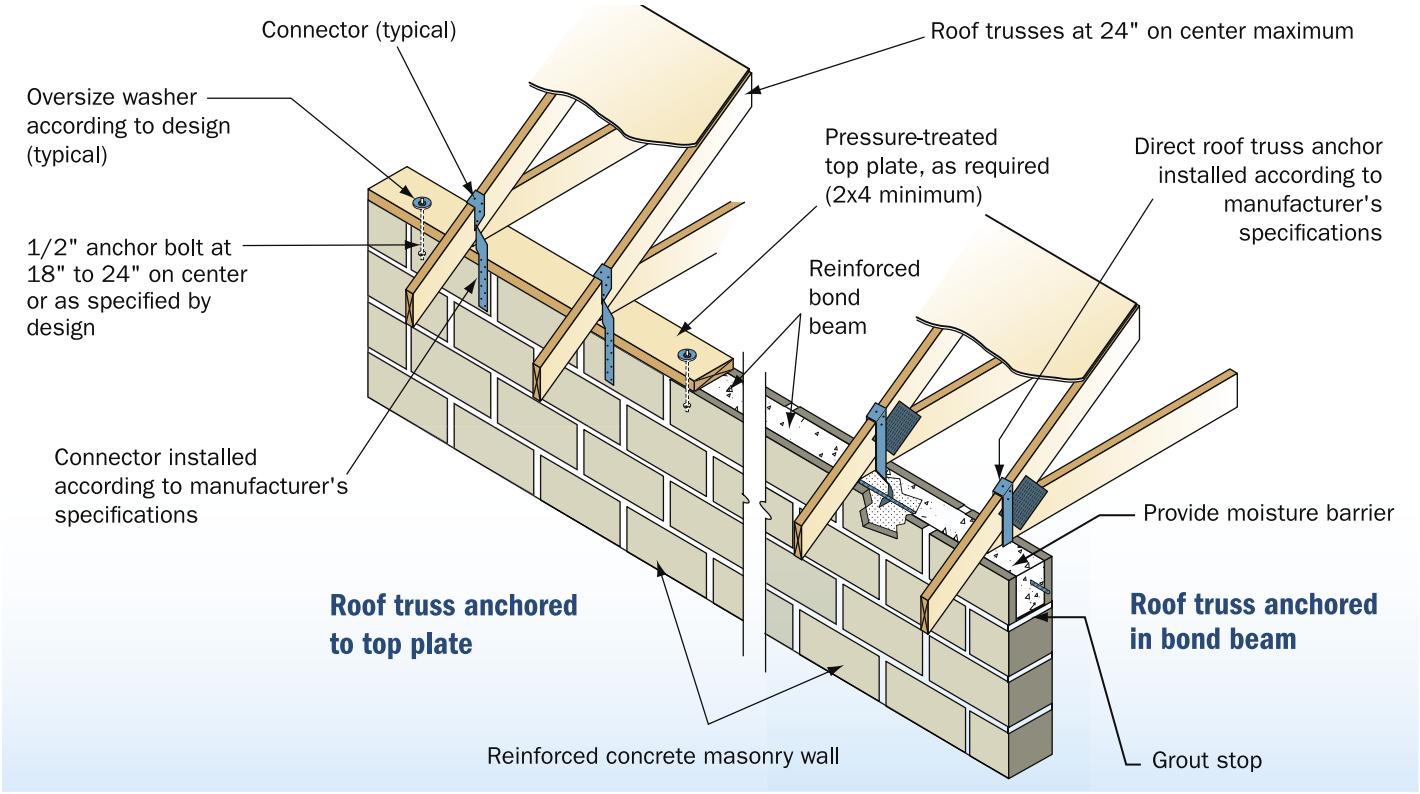

Roof framing to masonry wall.

Gable end wall – cut concrete rake beam with outlooker-type overhang

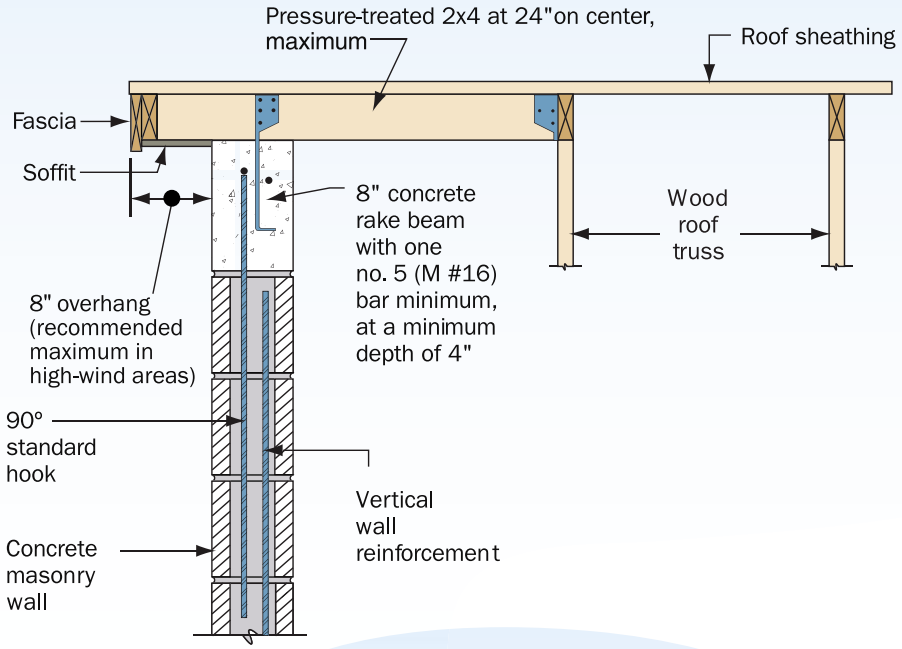

Gable end wall – cut masonry rake beam with ladder-type overhang

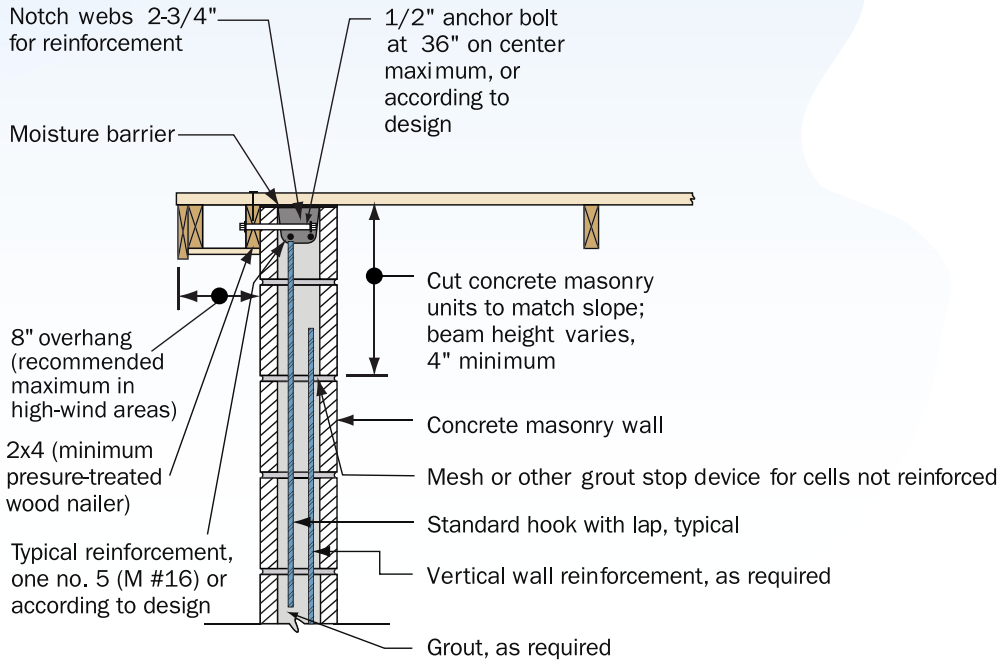

Gable endwall connection.

Durability – High winds and salt-laden air can damage masonry construction. The entry of moisture into large cracks can lead to corrosion of the reinforcement and subsequent cracking and spalling. Moisture resistance is highly dependent on the materials and quality of construction.

Quality depends on:

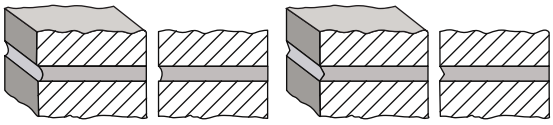

- **Proper storage of material –** Keep stored materials covered and off the ground.
- **Proper batching –** Mortar and grout must be properly batched to yield the required strength.
- **Good workmanship –** Head and bed joints must be well mortared and well tooled. Concave joints and V-joints provide the best moisture protection (see detail above). All block walls should be laid with full mortar coverage on horizontal and vertical face shells. Block should be laid using a "double butter" technique for spreading mortar head joints. This practice provides for mortar-to-mortar contact as two blocks are laid together in the wall and prevents hairline cracking in the head joint.
- **Protection of work in progress –** Keep work in progress protected from rain. During inclement weather, the tops of unfinished walls should be covered at the end of the workday. The cover should extend 2 feet down both sides of the masonry and be securely held in place. Immediately after the completion of the walls, the wall cap should be installed to prevent excessive amounts of water from directly entering the masonry.

Reinforcement: Masonry must be reinforced according to the building plans. Coastal homes will typically require more reinforcing than inland homes. The following figure shows typical reinforcement requirements for a coastal home.

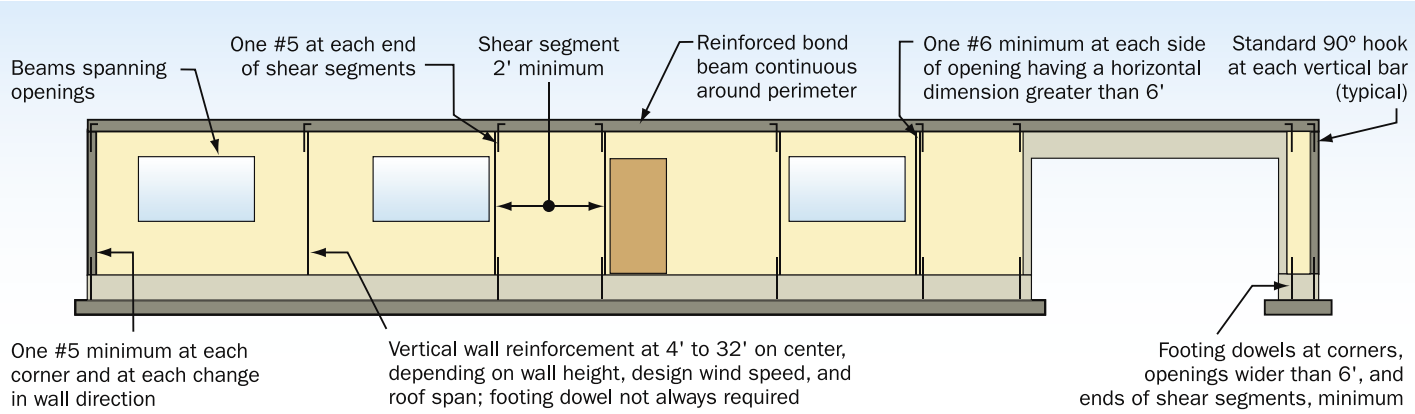

Masonry reinforcement.

Gable Ends: Because of their exposure, gable ends are more prone to damage than are hipped roofs unless the joint in conventional construction at the top of the endwall and the bottom of the gable is laterally supported for both inward and outward forces. The figure at right shows a construction method that uses continuous masonry from the floor to the roof diaphragm with a raked cast-in-place concrete bond beam or a cut masonry bond beam.

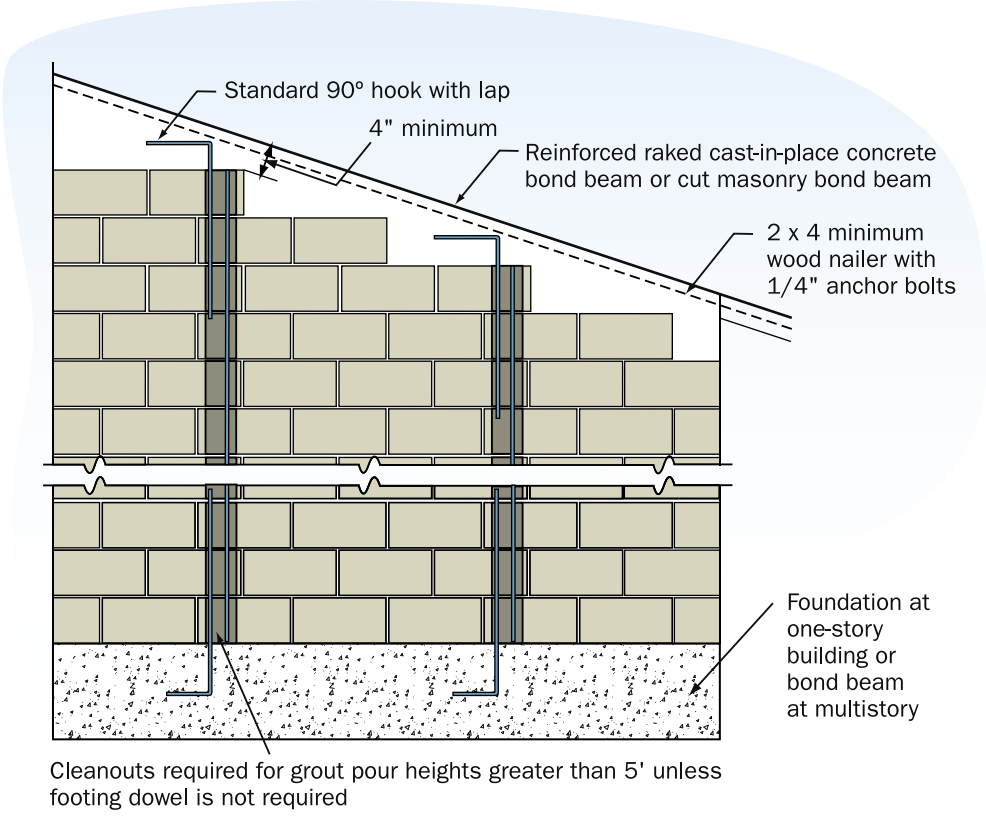

Continuous gable endwall reinforcement.