Use of Connectors and Brackets

HOME BUILDER'S GUIDE TO COASTAL CONSTRUCTION FEMA 499/August 2005 Technical Fact Sheet No. 17

Purpose: To highlight important building connections and illustrate the proper use of various types of connection hardware.

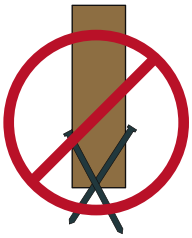

Never rely on toe-nailing for uplift connections in high-wind areas

Key Issues

- In high-wind regions, special hardware is used for most framing connections. Toe-nailing is not an acceptable method for resisting uplift loads in high-wind regions.
- Hardware must be installed according to the manufacturer's or engineer's specifications.
- The correct number of the specified fasteners (length and diameter) must be used with connection hardware.
- Avoid cross-grain tension in connections.
- Metal hardware must be adequately protected from corrosion (see NFIP Technical Bulletin 8-96).
- Connections must provide a continuous load path (see Fact Sheet No. 10).

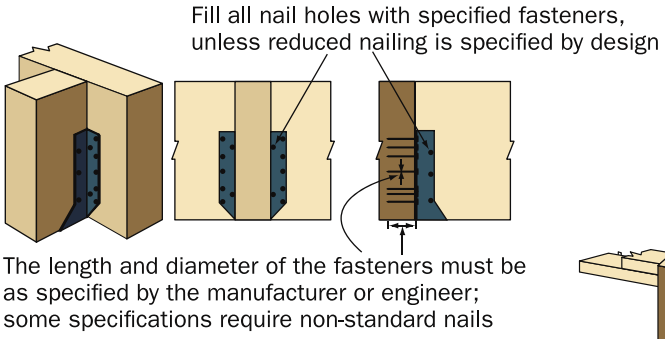

Proper fasteners must be used with connection hardware.

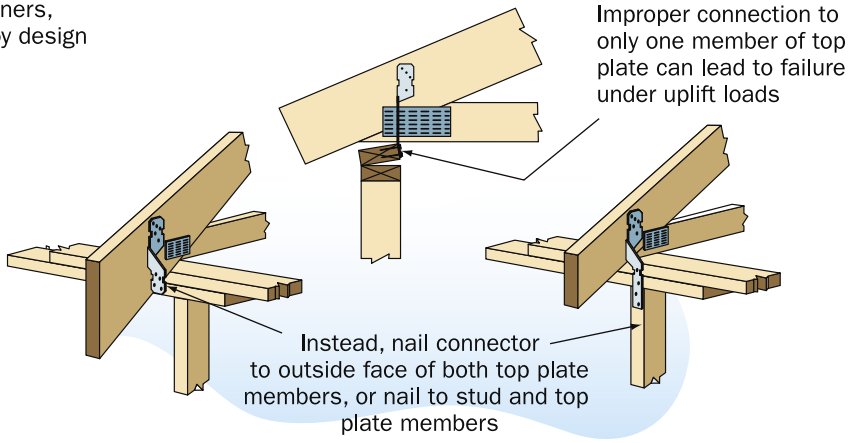

Avoid load path failure at roof-to-wall connections.

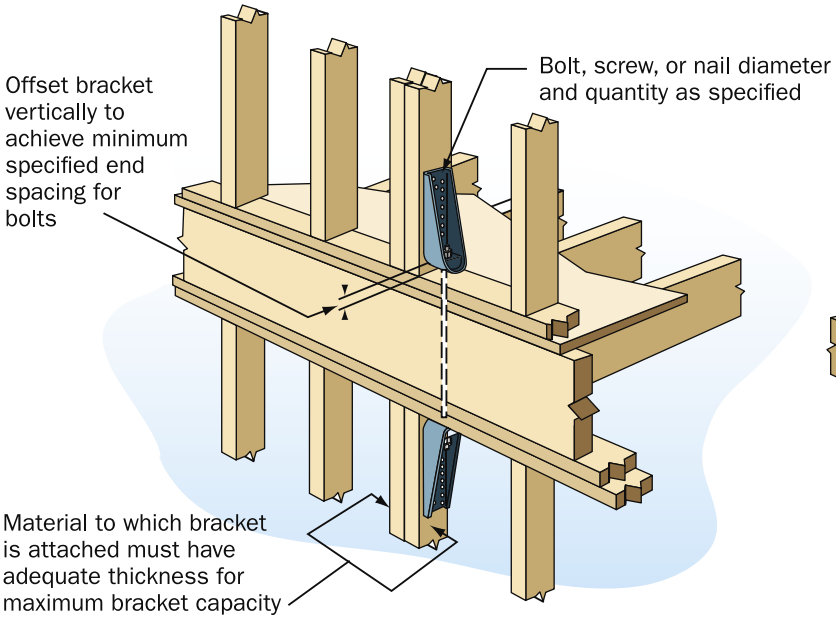

Proper bracket connection.

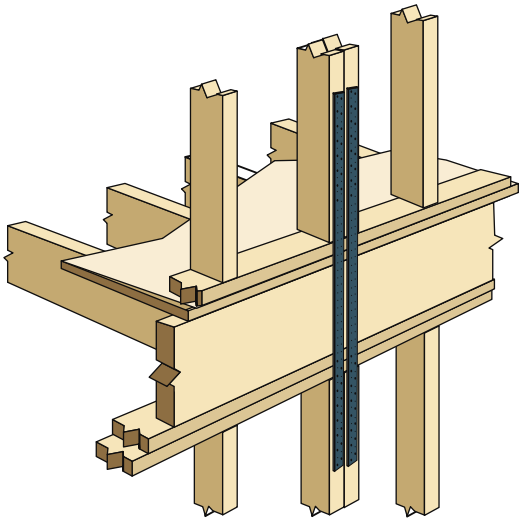

Proper strap connection.

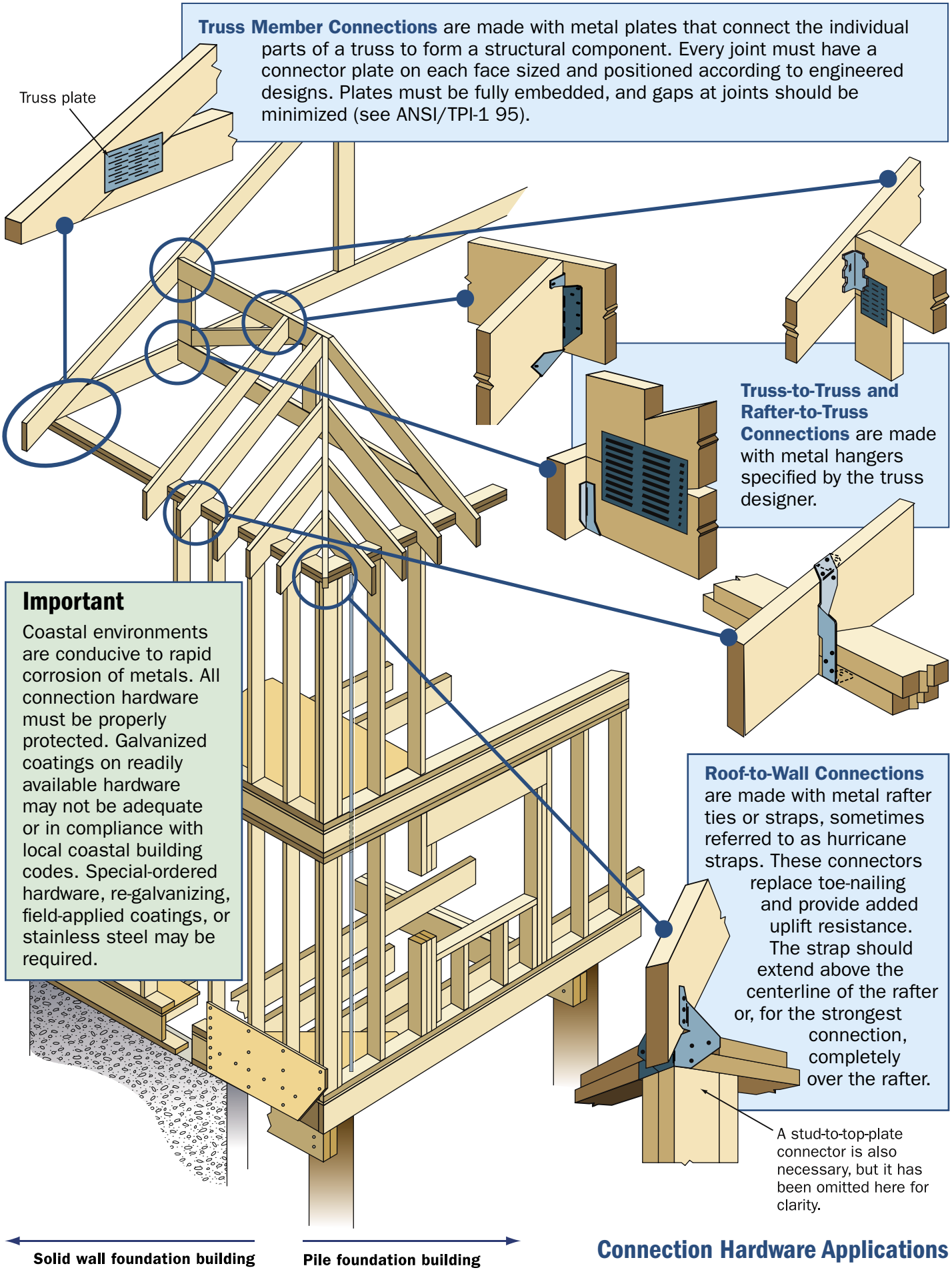

Truss Member Connections are made with metal plates that connect the individual parts of a truss to form a structural component. Every joint must have a connector plate on each face sized and positioned according to engineered designs. Plates must be fully embedded, and gaps at joints should be minimized (see ANSI/TPI-1 95).

Truss-to-Truss and Rafter-to-Truss Connections are made with metal hangers specified by the truss designer.

Roof-to-Wall Connections are made with metal rafter ties or straps, sometimes referred to as hurricane straps. These connectors replace toe-nailing and provide added uplift resistance. The strap should extend above the centerline of the rafter or, for the strongest connection, completely over the rafter.

A stud-to-top-plate connector is also necessary, but it has been omitted here for clarity.

Important

Coastal environments are conducive to rapid corrosion of metals. All connection hardware must be properly protected. Galvanized coatings on readily available hardware may not be adequate or in compliance with local coastal building codes. Special-ordered hardware, re-galvanizing, field-applied coatings, or stainless steel may be required.

Connection Hardware Applications

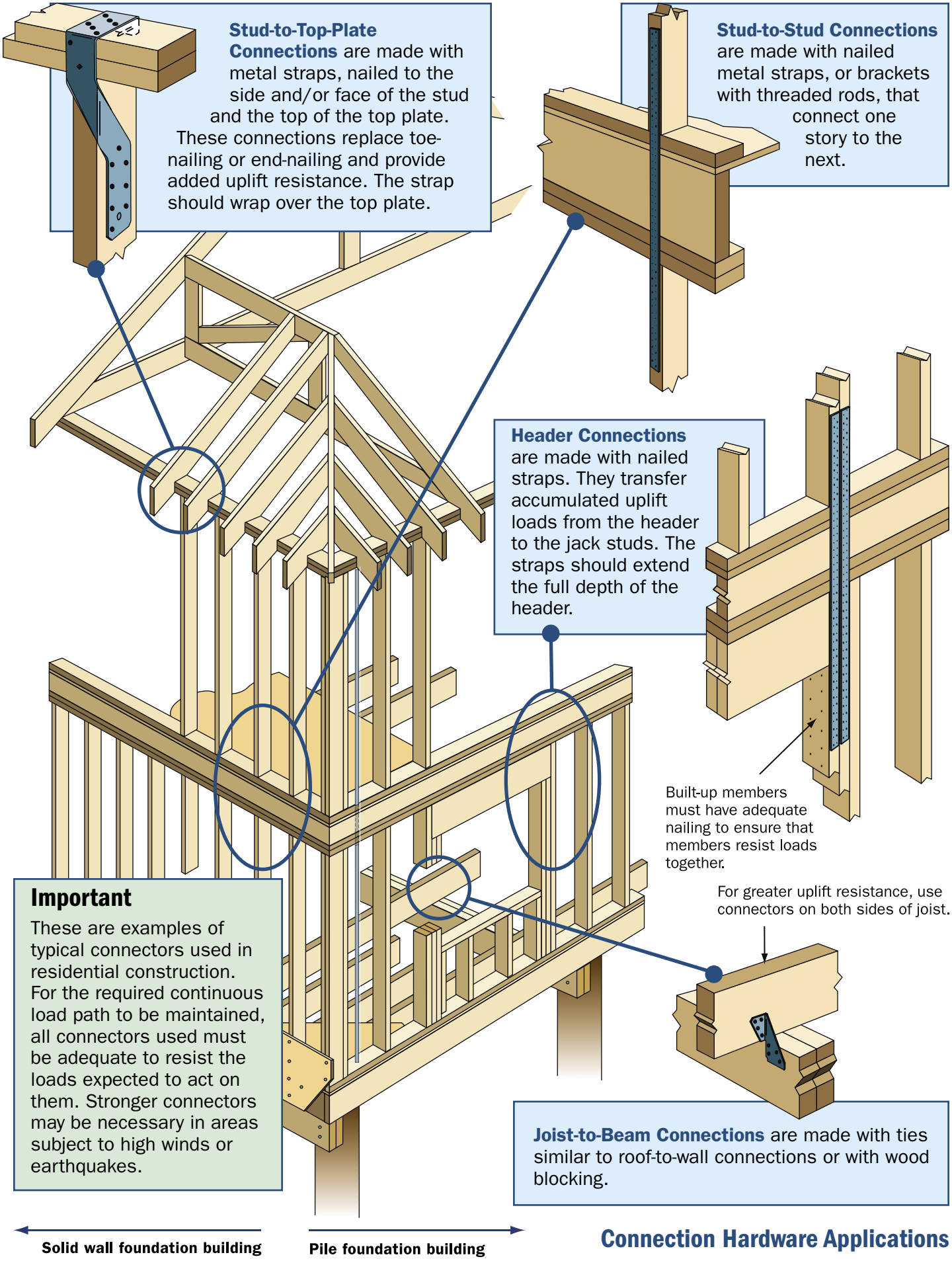

Connection Hardware Applications

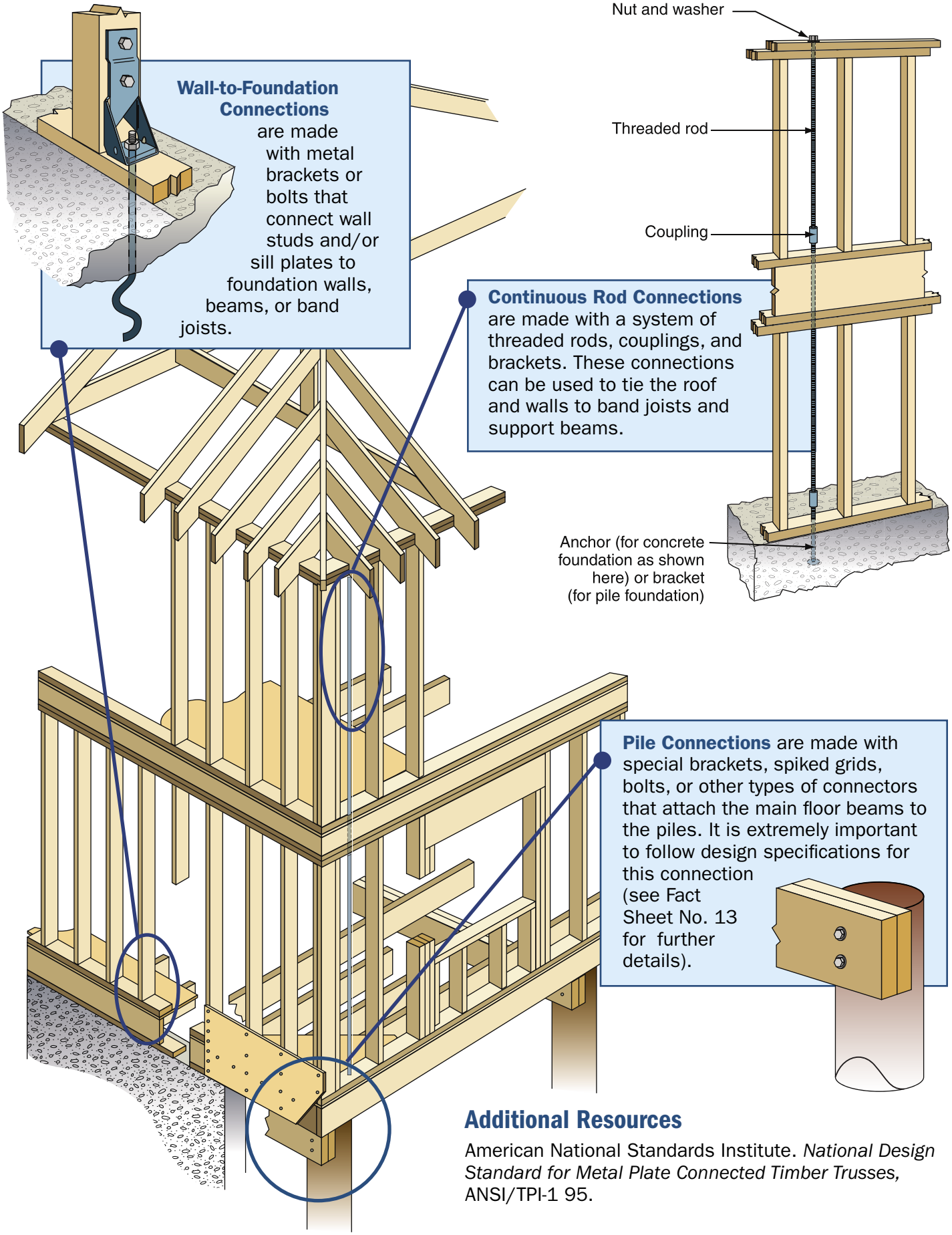

Wall-to-Foundation Connections are made with metal brackets or bolts that connect wall studs and/or sill plates to foundation walls, beams, or band joists.

Continuous Rod Connections are made with a system of threaded rods, couplings, and brackets. These connections can be used to tie the roof and walls to band joists and support beams.

Pile Connections are made with special brackets, spiked grids, bolts, or other types of connectors that attach the main floor beams to the piles. It is extremely important to follow design specifications for this connection (see Fact Sheet No. 13 for further details).

Additional Resources

American National Standards Institute. *National Design Standard for Metal Plate Connected Timber Trusses,* ANSI/TPI-1 95.

Solid wall foundation building ← → **Pile foundation building**

Connection Hardware Applications