Wood-Pile-to-Beam Connections

HOME BUILDER'S GUIDE TO COASTAL CONSTRUCTION FEMA 499/August 2005 Technical Fact Sheet No. 13

Purpose: To illustrate typical wood-pile-to-beam connections, provide basic construction guidelines on various connection methods, and show pile bracing connection techniques.

NOTE: The pile-to-beam connection is one of the most critical links in the structure. ***This connection must be designed by an engineer.*** See Fact Sheet No. 10 for "load path" information. The number of bolts and typical bolt placement dimensions shown are for illustrative purposes only. Connection designs are not limited to those shown here, and not all of the information to be considered in the designs is included in these illustrations. ***Final designs are the responsibility of the engineer.***

Key Issues

- Verify pile alignment and correct, if necessary, before making connections.
- Carefully cut piles to ensure required scarf depths.
- Limit cuts to no more than 50 percent of pile cross-section.
- Use corrosion-resistant hardware, such as hot-dipped galvanized or stainless steel (see Fact Sheet No. 8).
- Accurately locate and drill bolt holes.
- Field-treat all cuts and holes to prevent decay.
- Use sufficient pile and beam sizes to allow proper bolt edge distances.

Pile-to-beam connections must:

1. provide required ***bearing*** area for beam to rest on pile
2. provide required ***uplift*** (tension) resistance
3. maintain beam in an ***upright*** position
4. be capable of resisting ***lateral*** loads (wind and seismic)
5. be constructed with ***durable*** connectors and fasteners

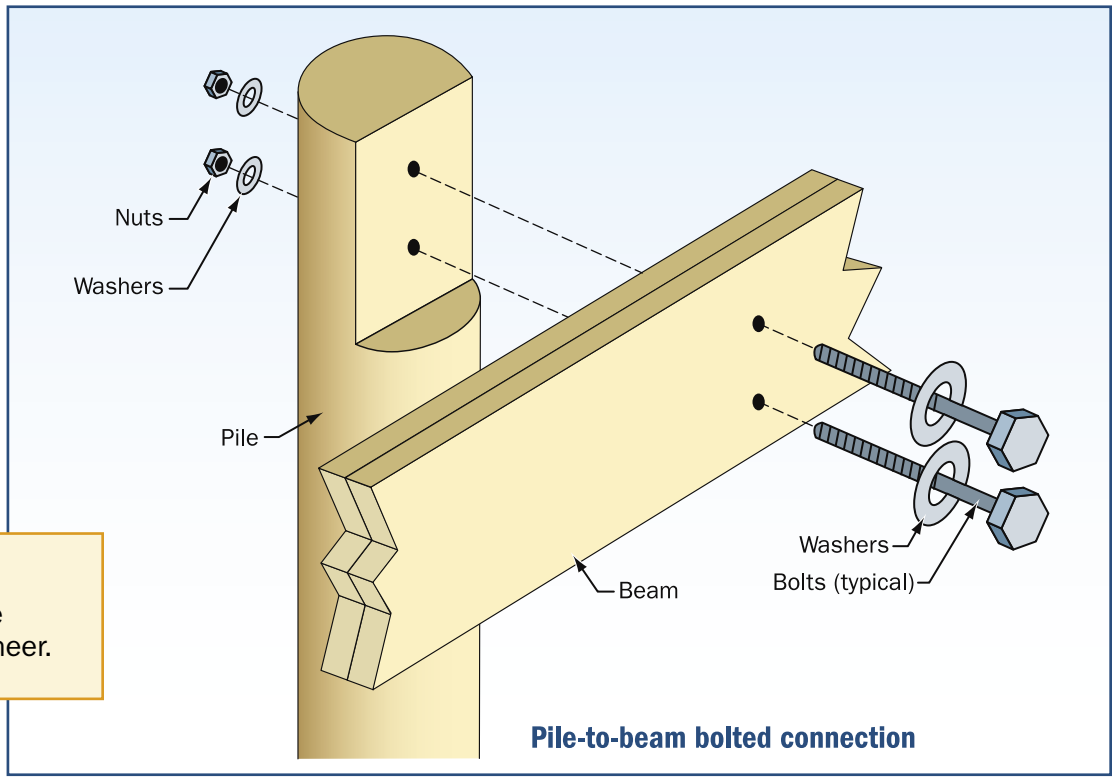

Pile-to-beam bolted connection

Note: Pile-to-beam connections must be designed by an engineer.

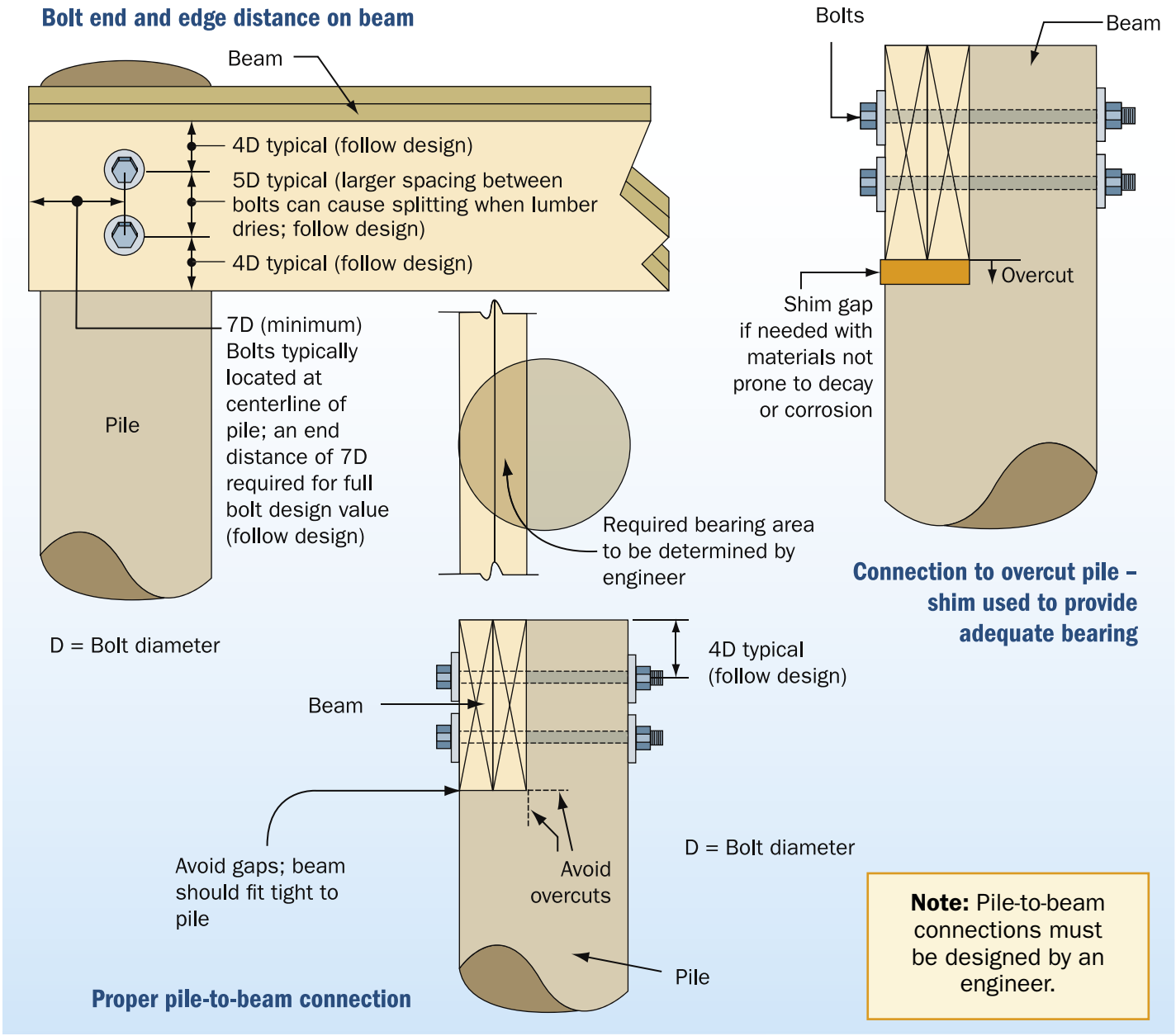

Problem: Misaligned piles – some piles are shifted in or out from their intended (design) locations.

Possible Solutions (see drawings on page 3 and details on page 4):

Option 1 (see page 3) – beam cannot be shifted

Option 2 (see page 3) – beam can be shifted laterally and remains square to building

Option 3 (see page 3) – beam can be shifted laterally, but does not remain square to building

Option 4 (not shown) – beam cannot be shifted, and connections shown in this fact sheet cannot be made; install and connect sister piles; ***an engineer must be consulted for this option***

Option 5 (not shown) – beam cannot be shifted, and connections shown in this fact sheet cannot be made; remove and reinstall piles, as necessary

Connections to misaligned piles

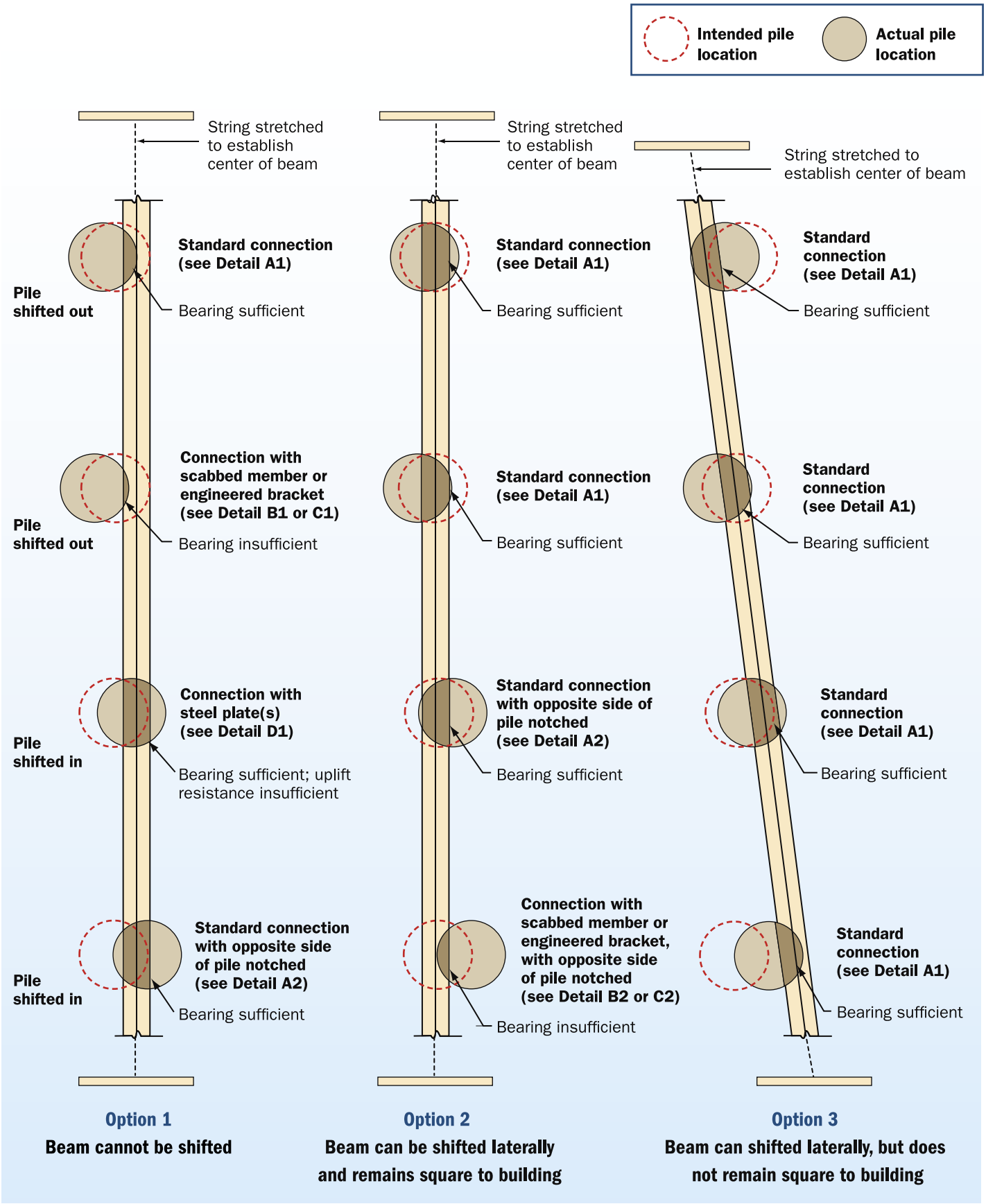

Note: Pile-to-beam connections must be designed by an engineer.

Connections to misaligned piles (see drawings on page 3 and details below)

1. The ability to construct the pile-to-beam connections designed by the engineer is directly dependent on the accuracy of pile installation and alignment.
2. Misaligned piles will require the contractor to modify pile-to-beam connections in the field.
3. Badly misaligned piles will require removal and reinstallation, sister piles, or special connections, all to be determined by the engineer.

Detail A1 **Standard connection**

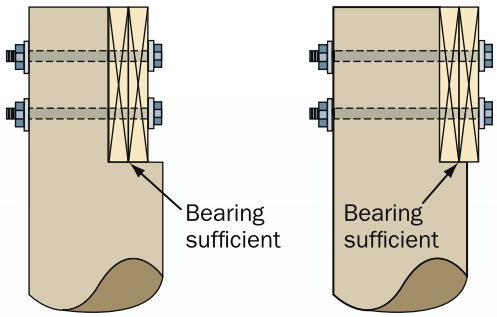

If bearing area under beam is sufficient, a standard bolted connection can be used; if bearing area is insufficient, install scabbed member (Detail B1/B2) or engineered bracket Detail (C1/C2)

Detail C1 **Insufficient bearing – engineered bracket for bearing**

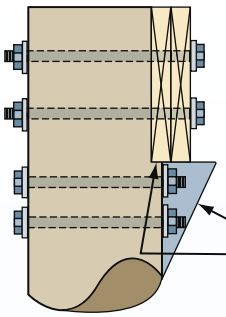

If bearing area under beam is insufficient, install engineered bracket; connection to be designed by an engineer

Detail A2 **Standard connection with pile notched on opposite side to avoid overnotching**

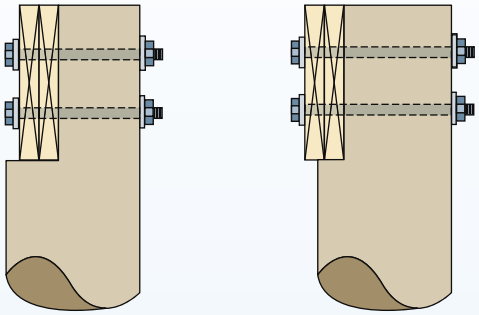

Detail C2 **Engineered bracket with pile notched on opposite side to avoid overnotching**

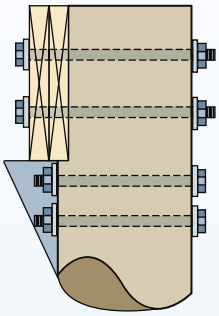

Detail B1 **Insufficient bearing – scabbed member for bearing**

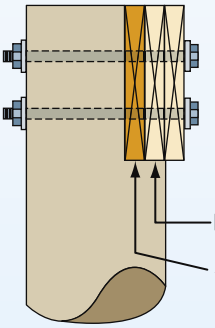

If bearing area under beam is insufficient, deepen notch and install scabbed member to achieve bearing; do not overnotch

Detail D1 **Insufficient uplift capacity – steel plate(s) for uplift resistance**

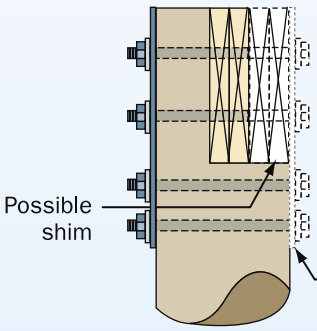

Notch side of pile that leaves the greatest pile section; use 1/4" or thicker galvanized steel plate(s) to satisfy uplift resistance requirements; connection to be designed by an engineer

Detail B2 **Scabbed member with pile notched on opposite side to avoid overnotching**

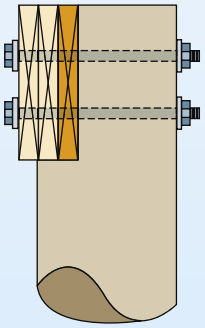

Detail D2 **Steel plate(s) with pile notched on opposite side to avoid overnotching**

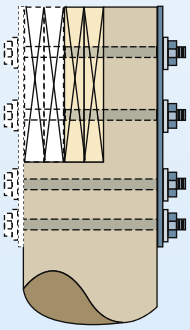

Note: Pile-to-beam connections must be designed by an engineer.

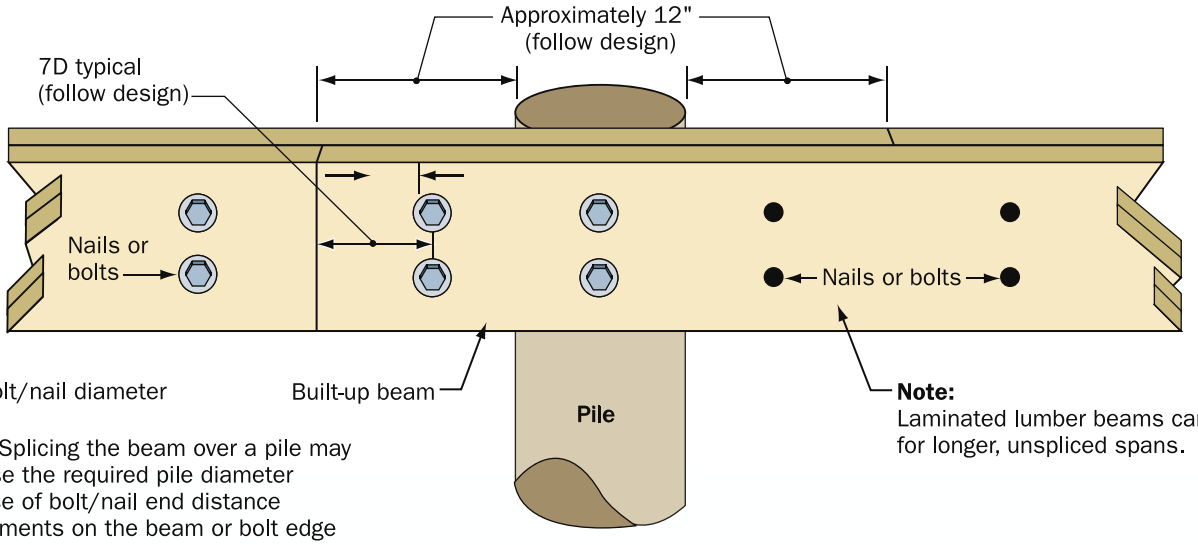

D = Bolt/nail diameter

Built-up beam

Note: Splicing the beam over a pile may increase the required pile diameter because of bolt/nail end distance requirements on the beam or bolt edge distance requirements on the pile.

Note:
Laminated lumber beams can be used for longer, unspliced spans.

Lapped splice (built-up beam)

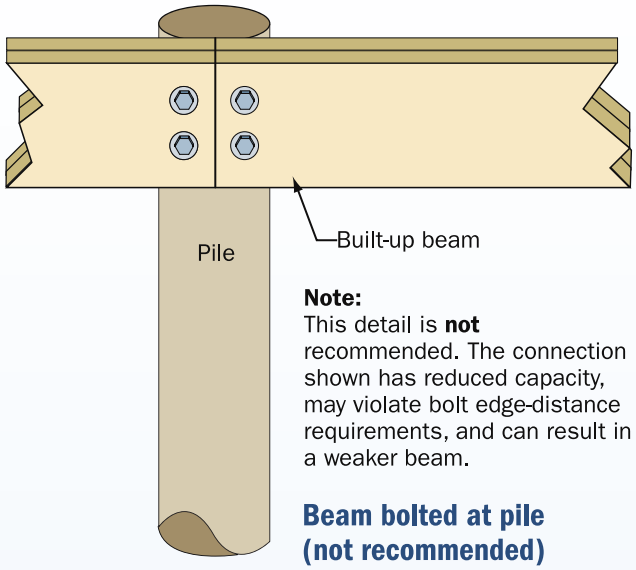

Note:
This detail is **not** recommended. The connection shown has reduced capacity, may violate bolt edge-distance requirements, and can result in a weaker beam.

Beam bolted at pile (not recommended)

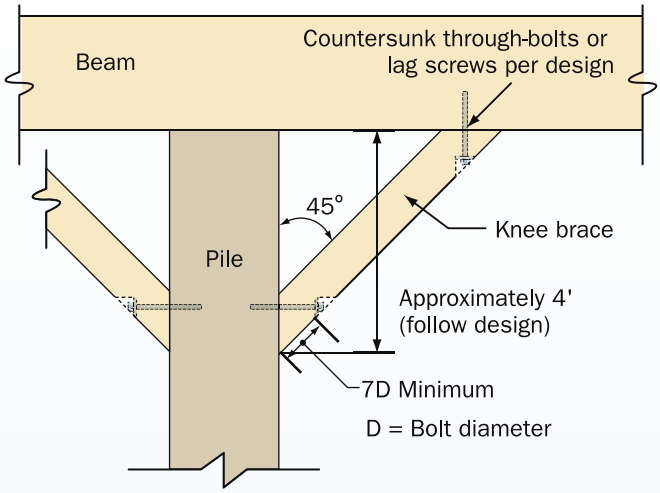

Knee brace connection on square pile*

*Knee braces of this type can also be used on notched round piles.

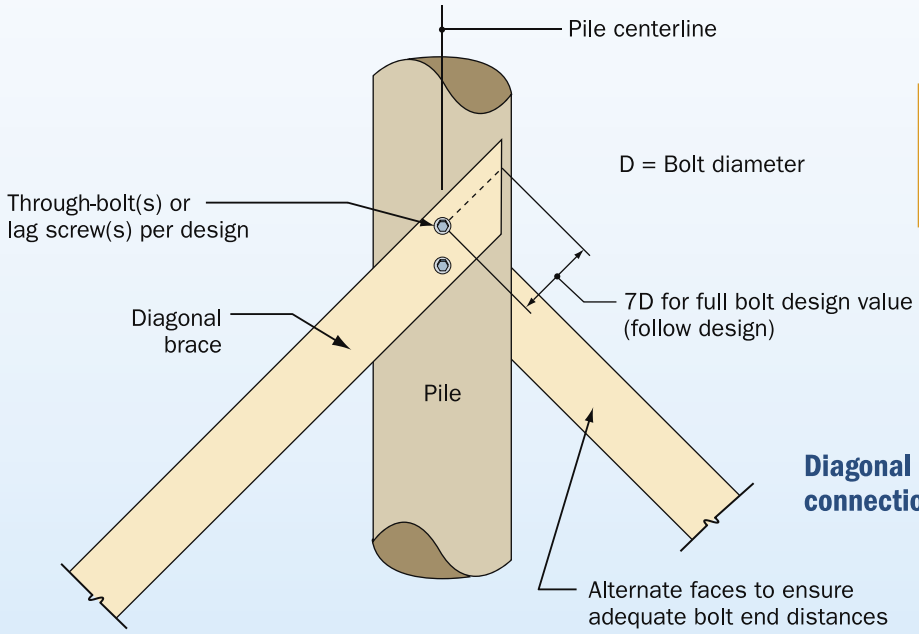

Note: Pile-to-beam connections must be designed by an engineer.

Diagonal brace connections on round pile